INDUSTRIAL INK-JET PRINTER

EBS-6800P

USER MANUAL

2020/03/19#1.3EN

SUPPLEMENT TO THE BOLTMARK®-SERIES PRINTER USER MANUAL

Table of Contents

1. Preliminary Information 3
1.1. Compliance with Standards 3
2. Safety Information 5
3. Description of the EBS-6800P Printer 5
3.1. Purpose 5
3.2. Front View 6
3.2.1. Consumables Compartment 7
3.3. Rear View 8
3.4. Printhead 9
3.5. Consumables 9
3.5.1. Ink and Solvent Bottles 9
3.5.2. iModule® 10
4. Installation 11
4.1. Installing Bottles 13
4.2. Installing iModule® 13
4.3. First Printer Startup 14
5. Replacing Consumables 16
5.1. Replacing the Ink/Solvent Bottle 16
5.2. Replacing iModule® 18
6. Periodic Maintenance 19
7. Storing and Transporting 20
7.1. Storing the Printer 20
7.1.1. Storing for up to 1 week 21
7.1.2. Storing for up to 3 months 21
7.1.3. Storing for over 3 months 22
7.1.4. Procedure for stirring ink periodically in standby mode 22
7.2. Transporting the Printer 24
8. Technical Specifications 26
9. Version Review 27

1. PRELIMINARY INFORMATION

This document is a supplement to the **BOLTMARK®**-series Printer User Manual and it contains all necessary information about operation of the **EBS-6800P** printers designed for printing with a pigment ink.

*The **BOLTMARK®**-series Printer User Manual contains the information about the following printers:*
***EBS-6500**,*
***EBS-6800**,*
***EBS-7200**.*

*The current version of The **BOLTMARK®**-series Printer User Manual is **20140422v2_2** when this document is published.*

Operation of the **EBS-6800P** printers is very similar to operation of the other **BOLTMARK®**-series printers.

The differences are described in this document. The **BOLTMARK®**-series Printer User Manual shall be used for any issues not described in this supplement.

The standard furnishings and available options of the **EBS-6800P** printers are similar to those of the **EBS-6800** printers.

*This version of the document includes most of the modifications implemented to the **EBS Ink Jet Systeme** printers up to software version **39_1D**, and the descriptions contained therein correspond to the printers on which this software version is installed.*

*The product delivered to you corresponds to your specific order, and it may happen that the options and functionality of your printing system differ from some descriptions or illustrations. As we need to keep pace with new technological advancement and wish to meet individual requirements of our clients, we reserve the right to introduce changes in the design and construction as and when necessary. Therefore, claims cannot be made regarding differences to data, illustrations or descriptions contained in this manual. Should your printer be equipped with options or software that are not illustrated or described in this manual or should you have additional queries after having read the manual, please contact any **EBS Ink Jet Systeme** authorized representative office for more information.*

The manufacturer shall not be liable for any damages to the printer resulting from failure to follow the instructions or from consequences of editorial or publishing errors contained in this manual.

The application and use of the products are beyond our control and are the full responsibility of the user.

This document has originally been drawn up in English. Any other language versions are translations from the original version. Should any discrepancies occur, the English language version shall prevail.

The part numbers quoted in this document are the same for every figure and every description given in this document.

1.1. COMPLIANCE WITH STANDARDS

The manufacturer declares with its full responsibility that when installed and operated in compliance with the manufacturer's instructions, the **EBS-6800P** printers together with their manufacturer-supplied accessories meet the essential requirements and other relevant provisions of the following European Union Directives:

- **2014/53/EU**,

– **2011/65/EU**

and meet the following harmonized standards:

Standard	RED Directive reference
– **EN 60950-1:2006 + A11:2009 + A1:2010 + A2:2013,** – **EN 50364:2018,** – **EN 62369-1:2009,**	The protection of health and safety of persons and of domestic animals and the protection of property - with reference to Art. 3, par. 1 a)
– **ETSI EN 301 489-1 V2.1.1:2017-02,** – **ETSI EN 301 489-3 V2.1.1:2017-03,** – **EN IEC 61000-6-2:2019,** Note: The exposure severity levels applied during EMC immunity testing met the EN 61000-6-2 for industrial environment. – **EN 61000-6-4:2007 + A1:2011,** – **EN 55022:2010 + AC:2011,** – **EN 55032:2015,** – **EN 61000-3-2:2014,** – **EN 61000-3-3:2013,** – **EN 61000-4-2:2009,** – **EN 61000-4-3:2006 + A1:2008 + A2:2010,** – **EN 61000-4-4:2012,** – **EN 61000-4-5:2014,** – **EN 61000-4-6:2014,** – **EN 61000-4-11:2004,** – **EN 61000-4-20:2010,**	The protection requirements with respect to electromagnetic compatibility - with reference to Art. 3, par. 1 b)
– **ETSI EN 300 330 V2.1.1:2017.**	Effective use and support the efficient use of radio spectrum in order to avoid harmful interference - with reference to Art. 3, par. 2

Therefore the **EBS-6800P** printers bear the mark:

CE

*The **EBS-6800P** printers are class **A** equipment as defined by **EN 55022:2010 + AC:2011** (industrial environment). In a domestic environment they may cause radio interference in which case the user may be required to take adequate counter measures.*

2. SAFETY INFORMATION

*While replacing/installing bottles, be careful not to get wounded with the needles that are part of bottle connections **18**, **19** (see **Fig. 7 on page 11** and **Fig. 8 on page 12**). Avoid manipulations near the needles. The information about the presence of sharp elements (needles) and the location of such elements, if any, is indicated on warning label **24** (see **Fig. 8 on page 12**) that is on the backplate of the consumables compartment, under the bottle connection.*

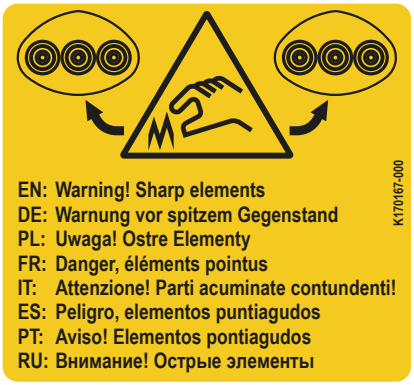

3. DESCRIPTION OF THE EBS-6800P PRINTER

From the user's perspective, the structure of the **EBS-6800P** printers is similar to the structure of the **EBS-6800** printers.

The main differences exist in:

- iModule®,
- ink and solvent bottles,
- certain printhead components such as the connector together with an ink filter,
- outer dimensions (height) of the complete printer,
- periodic maintenance schedule,
- storage and transport requirements.

3.1. PURPOSE

The enrichment of the **BOLTMARK®** series with the **EBS-6800P** printer designed for printing with a pigment ink contributes to:

- better print coating and color intensity, even on surfaces difficult to print on,
- an extended range of products to print on, including the products on which a black ink could not be visible, such as rubber, wires coated with dark insulation, etc.,
- an extended pallet of ink colors.

3.2. FRONT VIEW

Fig. 1.

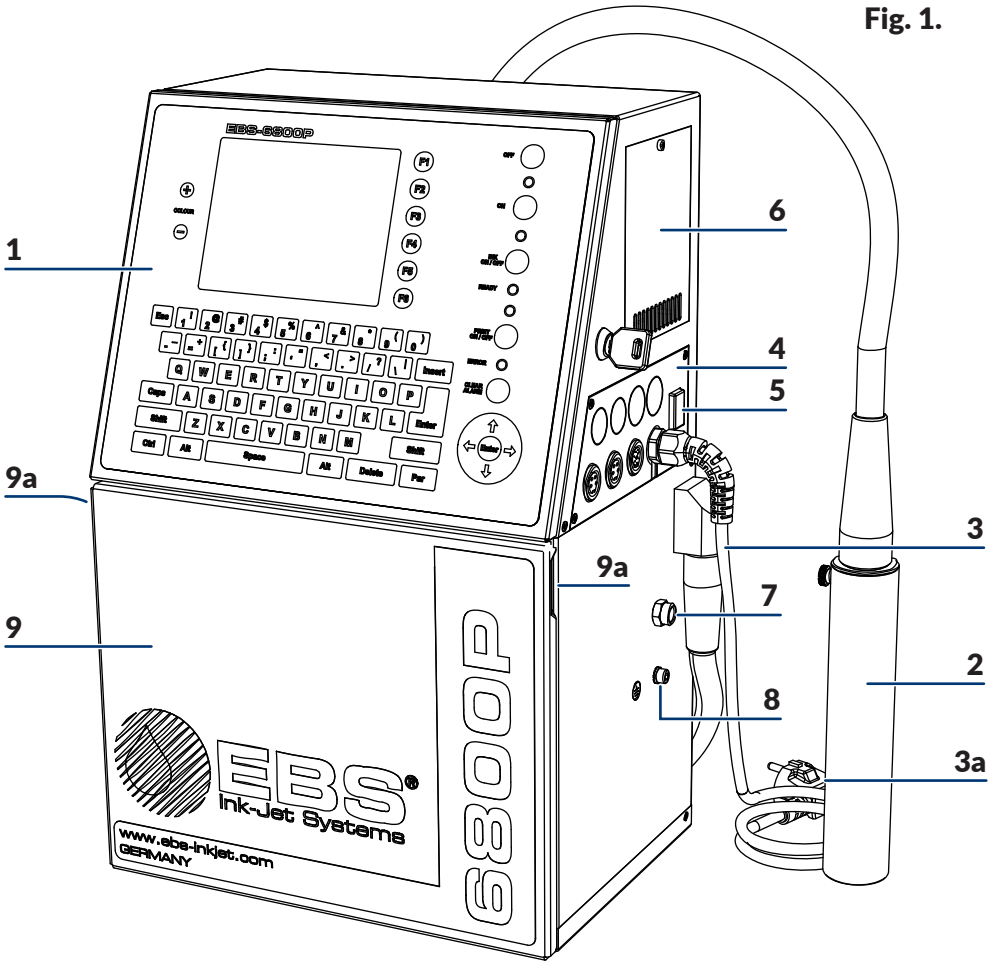

1	Operator panel.
2	Printhead.
3	Power cable with a power plug **3a***.
4	Accessories connector plate.
5	Power switch **POWER**; safety switch.
6	Air filter element cover.
7	Vapor outlet.
8	Ground terminal.
9	Consumables compartment door with door holders **9a**.

** - according to the country of destination, the power plug may differ from that shown in **Fig. 1**.*

3.2.1. CONSUMABLES COMPARTMENT

Fig. 2.

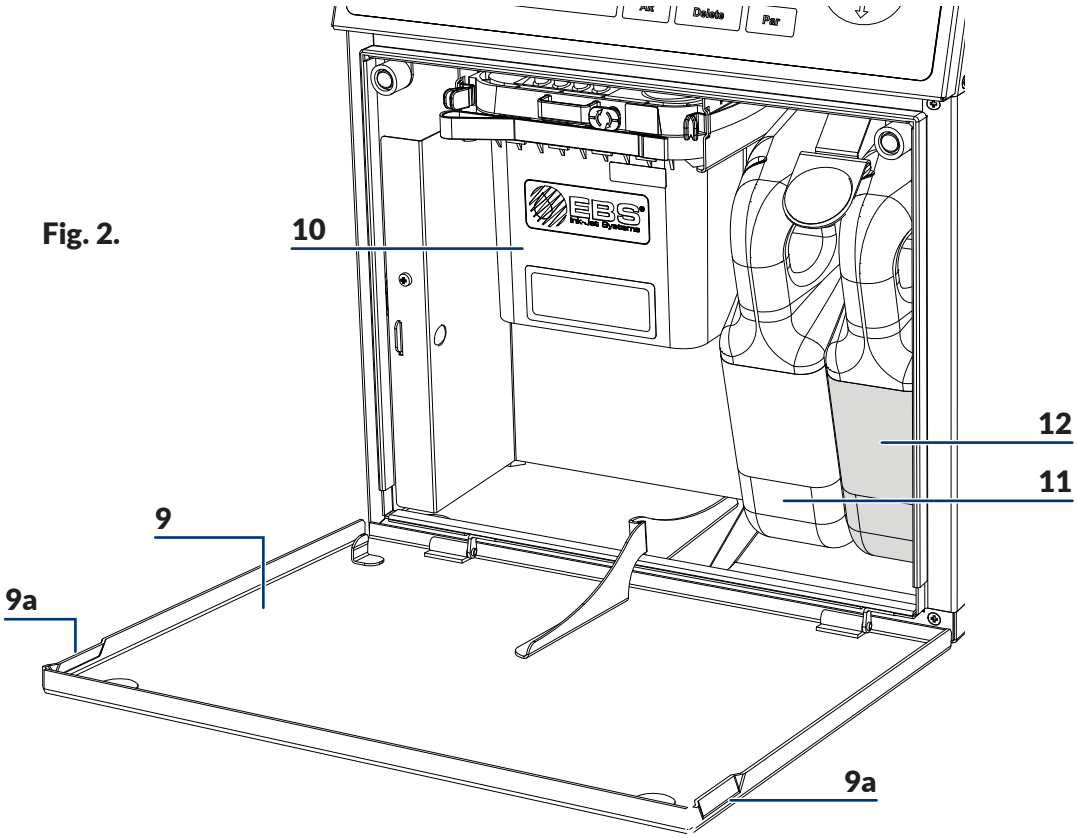

9	Consumables compartment door with door holders **9a**.
10	iModule®.
11	Solvent bottle.
12	Ink bottle.

3.3. REAR VIEW

Fig. 3.

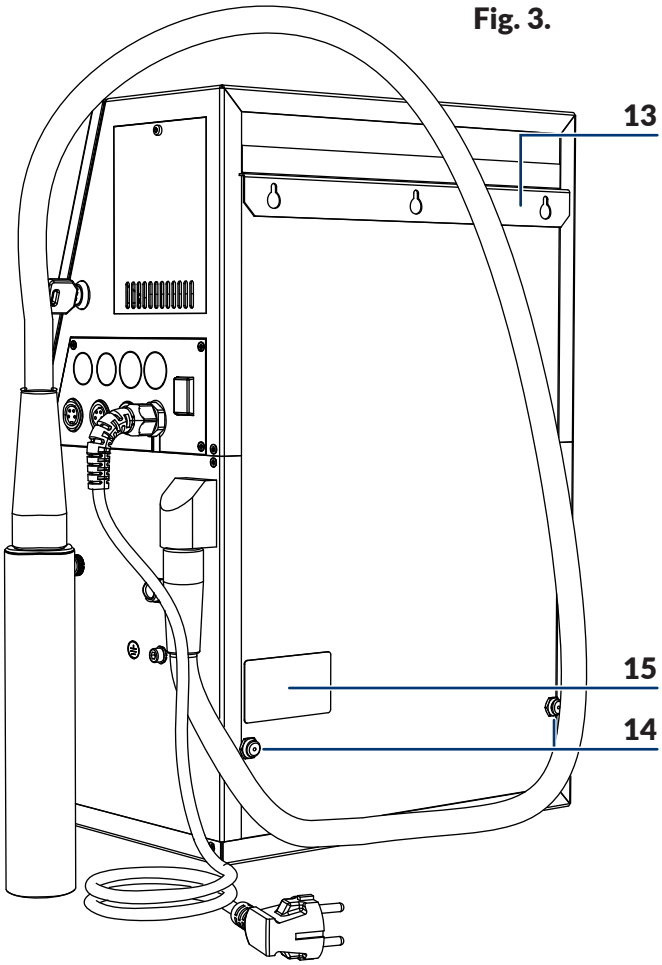

13	Stand.
14	Supports (support sleeves).
15	Nameplate.

3.4. PRINTHEAD

The main difference between the printhead **2** of the **EBS-6800P** printer and the printhead of the **EBS-6800** printer consists in ink filter fitting **2a**.

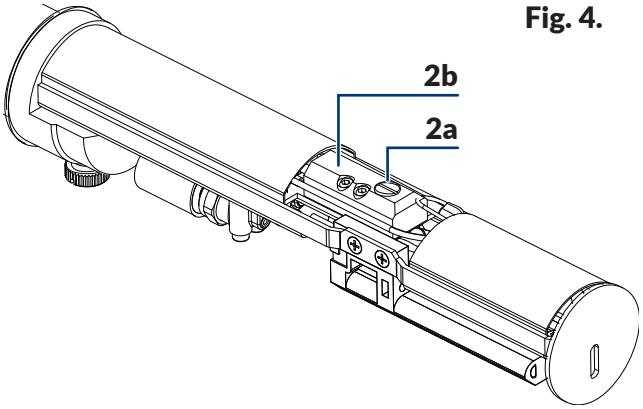

Fig. 4.

2a	Ink filter element fitting.
2b	Connector.

3.5. CONSUMABLES

3.5.1. INK AND SOLVENT BOTTLES

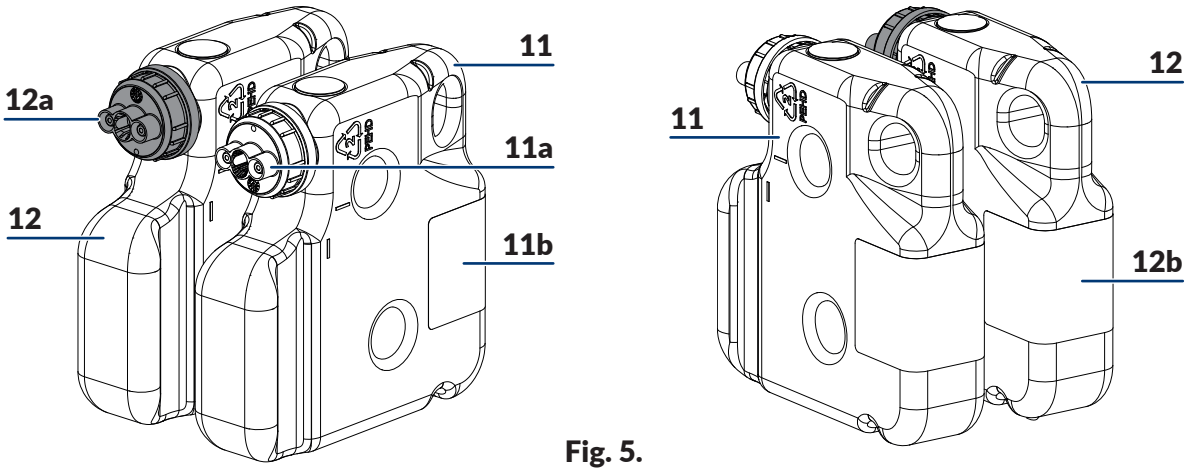

Fig. 5.

11	Solvent bottle.
11a	Solvent bottle cap; white.
11b	Solvent bottle label.
12	Ink bottle.
12a	Ink bottle cap; black.
12b	Ink bottle label.

*Owing to the need to stir bottled ink, the ink bottle **12** designed for the **EBS-6800P** printers contains **up to 750 ml** of ink.*
*The solvent bottle **11** designed for the **EBS-6800P** printers contains **900 ml** of solvent - as it is the case with the other **BOLTMARK®**-series printers.*

3.5.2. iMODULE®

*One type of iModule® that is dedicated to working with pigment ink is designed for the **EBS-6800P** printers.*
For more information about iModule® see the iModule® label.

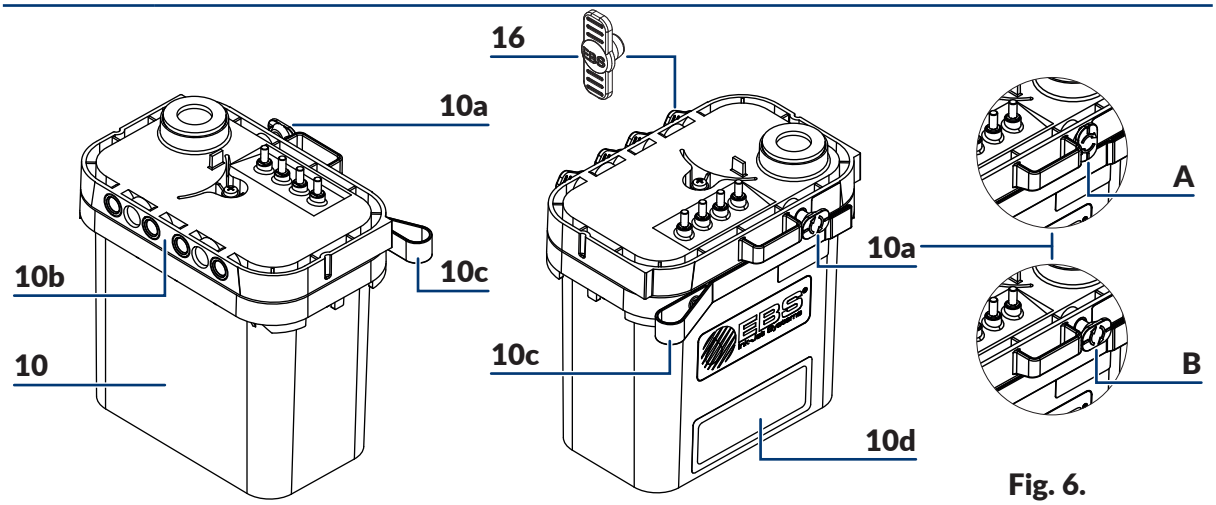

Fig. 6.

10	iModule®.
	Protections used when the printer is transported:
10a	**A** - in the "**closed**" position,
	B - in the "**open**" position.
10b	iModule® connectors.
10c	Strap-holder.
10d	iModule® label.
16	Transport-protection plug type **I**.

*iModule® designed for operation in the **EBS-6800P** printer is equipped with an ink stirring system to prevent the pigment from settling.*

4. INSTALLATION

The user can install the printer unassisted, when the printer:

- is filled with ink,

If it is filled with ink, the printer must be:
- started up in regular mode
or
*- connected to the electrical mains so that stand-by mode with periodic ink stirring is enabled; see section **"7.1.4. Procedure for stirring ink periodically in standby mode"** within **1 week** from shutting down.*

*The time (given in minutes) for which the printer had been off before it was switched on can be viewed by means of **SERVICE** ➔ **HV VALUE,PHOTO,SHAFT state** (item **PrOFF**).*

- was previously prepared for transporting in compliance with the instructions given in section **"7.2. Transporting the Printer"** (see **Fig. 7**),

If the printer is prepared for over 3-month storing, i.e. it is, among other things, filled with solvent, it can be installed by the distributor's authorized service staff only.
*The power switch **POWER 5** (see **Fig. 1 on page 6**) on the accessories connector plate **4** should be easily available as it is the safety switch.*

Fig. 7.

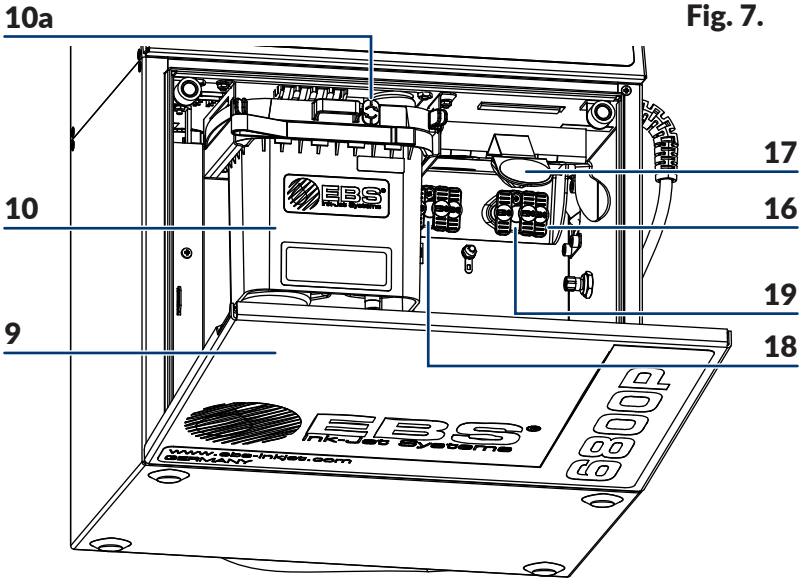

9	Consumables compartment door.
10	iModule®.
10a	Transport protection of iModule®.
16	Transport-protection plug type **I**.
17	Latch fastener for bottles.
18	Connector (white) for a solvent bottle.
19	Connector (black) for an ink bottle.

- has been supplied without iModule®, and a new iModule® unit (or the one used in that printer before) has been delivered separately (see *Fig. 8*).

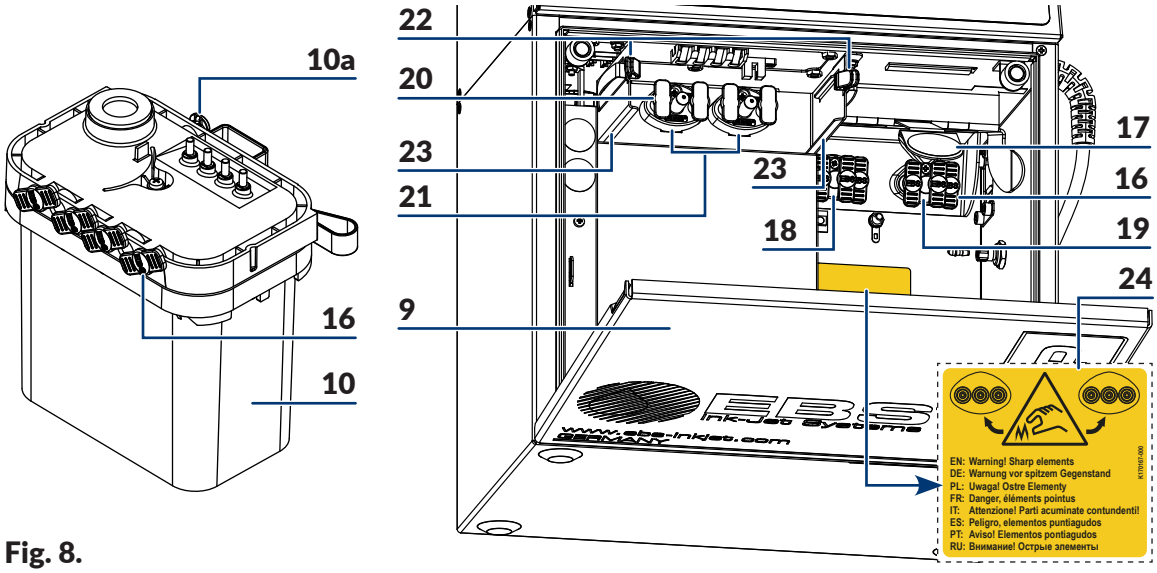

Fig. 8.

9	Consumables compartment door.
10	iModule®.
10a	Transport protection of iModule®.
16	Transport-protection plug type **I**.
17	Latch fastener for bottles.
18	Connector (white) for a solvent bottle.
19	Connector (black) for an ink bottle.
20	Transport-protection plug type **IV**.
21	iModule® connector.
22	Catches that fasten iModule®.
23	iModule® guides.
24	Information and warning sticker: "**Warning! Sharp elements**"

The **EBS-6800P** printer can be installed similarly to the other **BOLTMARK®**-series printers. The differences exist in:

- the installation of bottles,
- the installation of iModule®.

*For more details about the installation of the **BOLTMARK®**-series printers see The **BOLTMARK®**-series Printer User Manual.*

4.1. INSTALLING BOTTLES

*Before installing bottles, read the information contained in section **"2. Safety Information"**.*

In order to install bottles:

1. Open consumables compartment door **9**.
2. Remove the transport-protection plugs type **I** **16** from bottle connectors **18**, **19** (see ***Fig. 7 on page 11*** and ***Fig. 8 on page 12***).
3. If the bottles are protected with transport-protection plugs type **II** **26** and type **III** **25** (see ***Fig. 11 on page 24***), remove the plugs.

   Before installing the ink bottle, shake it dynamically to obtain a homogeneous liquid.

4. Lift the latch **17** that fastens the bottles.
5. Connect the bottles to their corresponding connectors, pressing them to the limit:

– the solvent bottle **11** with a white cap - to white connector **18** on the left-hand side,
– the ink bottle **12** with a black cap - to black connector **19** on the right-hand side.

*Bottles shall be installed in the **EBS-6800P** printers by connecting them to their connectors at an angle of **14°** with the horizontal line. For more details see section **"5.1. Replacing the Ink/ Solvent Bottle"**.*

6. Lower the latch fastener **17** so that it rested in the bottle grooves.
7. Close the consumables compartment door **9**.

4.2. INSTALLING IMODULE®

If the **EBS-6800P** printer was transported without iModule®, then iModule® that goes with that printer should be installed before printer startup.

How to install iModule®...

1. Remove transport-protection plugs type **I** **16** from the of iModule® connectors (see ***Fig. 8 on page 12***), if the plugs are installed.
2. Check to see if the iModule® connections are clean. Should any remnants of dry ink be found, remove them.
3. Open consumables compartment door **9**.
4. Remove transport-protection plugs type **IV** **20** from iModule® connector **21** in the printer.
5. Spray solvent on to the O-rings that are part of iModule® **21** in the printer. This will facilitate the insertion of a new iModule®.
6. Install the iModule® by inserting it **horizontally** along guides **23** until catches **22** are heard clicking.

7. Open transport protection **10a** of the iModule®, *i.e.* pull it out to the limit and rotate through **90°**.

*The iModule® transport protection **10a** cannot be opened until the printer is in its target workplace.*

8. Close the consumables compartment door **9**.

If the **EBS-6800P** printer was transported **with its iModule® installed**, then only the iModule® transport protection needs opening before printer startup.

How to open iModule® transport protection...

1. Open the consumables compartment door **9**.
2. Open transport protection **10a** of the iModule®, *i.e.* pull it out to the limit and rotate through **90°**.

*The iModule® transport protection **10a** cannot be opened until the printer is in its target workplace.*

3. Close the consumables compartment door **9**.

4.3. FIRST PRINTER STARTUP

When the printer is delivered to its workplace, it should be started up.

*While the printer start-up procedure is being followed, the iModule® transport protection **10a** must be open.*

How to start up the printer...

1. Connect outlet plug **3a** (see *Fig. 1 on page 6*) to electric power supply.
2. Set power switch **POWER 5** on accessories connector plate **4** to the "**I**" position.
3. Press the ON button.
   The printer starts up.
   The printer is started up and ready to print when the **READY** LED illuminates yellow.

*For more details about starting up the printer see The **BOLTMARK®**-series Printer User Manual.*

When new bottles are installed, then messages typical of the bottle replacement procedure are displayed on the screen during printer startup. In such a case follow the description given in section *"5.1. Replacing the Ink/Solvent Bottle"*.

While the printer in which a new iModule® is installed is started up, the screen shows the data on the detected iModule®, which is followed by the inquiry
Do you really want to install it? (Y,N)?
(Y=ENTER, N=ESC)

1. Press [ENTER] to continue.
   The message is displayed:
   CODE VERIFYING: WAIT 10 SECONDS PLEASE
   and then:
   Open transport protection, and then press ENTER.
2. Press [ENTER] to continue.
   The message is displayed:
   Filling iModule... Transport protection must be open !! Please wait.

   *An empty iModule® unit can be refilled, when bottles are installed in the printer and the level of the ink in the ink bottle is **min. 3 cm**. To check the amount of the ink in a bottle remove the ink bottle from the consumables compartment and put it on a horizontal surface.*

3. Wait for a successive message, conducting no operations.

   Depending on properties of the ink in the bottle, it may take even 10 minutes to fill in iMod-ule®!

   The message is displayed:
   iModule replaced & accepted
   Press ENTER...
4. Press [ENTER] to continue.
   The message is displayed:
   iModule
   iModule accepted
   Press ENTER...

   iModule® can be applied to one printer only. There is no possibility of putting an accepted iModule® into another printer.

5. Press [ENTER] to finish the iModule® installation procedure.
   The printer is started up and ready to print when the **READY** LED illuminates yellow.

5. REPLACING CONSUMABLES

5.1. REPLACING THE INK/SOLVENT BOTTLE

Components required:
*- a new solvent bottle **11** (see **Fig. 9 on page 17**) where the solvent is consistent with that previously used*
OR
*- a new ink bottle **12** where the ink is consistent with that previously used.*

*Before replacing bottles, read the information contained in section **"2. Safety Information"**.*

The upcoming need for replacing either bottle is announced by the message:

- **Solvent bottle almost empty** or **LOW SOLVENT** if the solvent bottle needs replacing

  or
- **Ink bottle almost empty** or **LOW INK** if the ink bottle needs replacing.

Contact your distributor to order a new bottle with an appropriate type of solvent or ink. The indispensable data can be read from the label of the bottle installed in the printer.

The need for replacement is indicated by:

- the message: **SOLVENT LACK** or **SOLVENT**: **EMPTY BOTTLE** if the solvent bottle needs replacing

  or

  the message: **INK LACK** or **INK**: **EMPTY BOTTLE** if the ink bottle needs replacing,
- a sound signal,
- the red LED **ERROR** on the operator panel.

The bottle should be replaced immediately after the above indications have occurred. This operation can also be conducted during printing. Otherwise printing pauses, and if the correct ink parameters cannot be maintained, the printer shuts down.

Fig. 9 shows how to replace ink bottle **12** as an example.

Fig. 9.

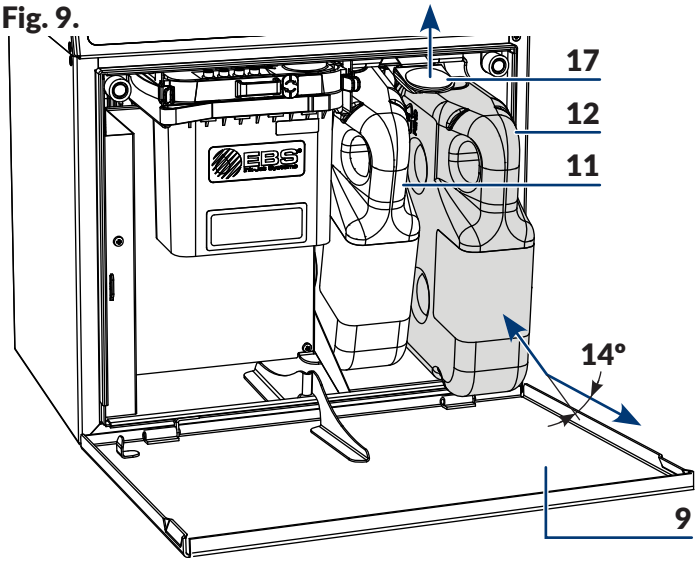

9	Consumables compartment door.
11	Solvent bottle (with a white cap).
12	Ink bottle (with a black cap).
17	Latch fastener for bottles.

How to replace a bottle ...

1. Open the consumables compartment door **9** (see *Fig. 9*).
2. Lift latch **17** that fastens the bottles.
3. Pull the empty solvent bottle **11** or ink bottle **12** out of the printer.
   The following message may be displayed:
   SOLVENT: **NO BOTTLE** for the solvent bottle **11**
   or
   INK: **NO BOTTLE** for the ink bottle **12**.

   *Before installing ink bottle **12** shake it dynamically to obtain a homogeneous liquid.*

4. Lift again the latch **17** that fastens the bottles.
5. Insert a new bottle in place of the empty one, pressing it to the limit.

   *Bottles shall be installed in the **EBS-6800P** printers by connecting them to their connectors at an angle of **14°** with the horizontal line.*

6. Lower the latch fastener **17** so that it rested in the bottle groove.
   The message **CODE VERIFYING: WAIT 10 SECONDS PLEASE** is displayed.

7. Wait a few seconds.
   The message **BOTTLE ACCEPTED** is displayed.
   The new bottle is installed.

   A bottle can be used in one printer only. There is no possibility of putting an accepted bottle into another printer.
   Dispose of the empty bottle following the selective collection principles.

8. Close the consumables compartment door **9**.

5.2. REPLACING IMODULE®

Periodic replacement of iModule® ensures faultless operation of the printer; iModule® must be replaced when the printer signals the need to do so. The failure to replace at a set date will make printing impossible.

*In the **EBS-6800P** printers, iModule® is replaced by the distributor's authorized service staff as part of periodic servicing. For more details see section **"6. Periodic Maintenance"**.*
*For more information on iModule® installed in the printer choose **CONSUMABLES → iMODULE INFORMATION → OPERATING TIME**.*

A graphic indicator of how much iModule® is worn out is displayed on the printer status bar:

Indicator									
Still remains [%]	100-88	87-76	75-63	62-51	50-38	37-26	25-13	12-1	<1

The upcoming date of iModule® replacement is signaled with one of the messages:
- **iModule running time is below 10% CALL SERVICE PLEASE**,
- **iModule running time expires in less than 300 hours CALL SERVICE PLEASE**,
- **iModule expires within 1 month CALL SERVICE PLEASE**.

The above messages are displayed in a cyclical pattern, and also each time the printer is started up.

Contact your distributor to notify it of the upcoming need for iModule® replacement. The indispensable data on iModule® used in the printer can be read from the label of the iModule® unit installed in the printer.

6. PERIODIC MAINTENANCE

Maintenance operation	Interval
Checking the printhead for tidiness	From time to time (recommended every week). *If heavy pollutions are found, it is recommended that they be removed from the printhead.*
Period servicing	Not less frequently than once a year. *The date of periodic servicing is set in the printer by the distributor's authorized service staff; owing to that the printer will inform the user of the need for servicing.* *The date of the successive service can be viewed by means of **SERVICE → SERVICE COMMANDS → DISP. NEXT SERVICE VISIT DATE**.*
Replacing iModule®	As part of periodic servicing. *iModule® should be replaced when the printer signals the need to do so (up on request).*
Replacing air filter element	Not less frequently than periodic servicing. *If the printer runs in a heavily polluted environment, it is recommended that the air filter element be checked for tidiness from time to time; if it is found very dirty, the filter element should be replaced by the user himself.*
Replacing printhead ink filter	As part of periodic servicing.

For details about the procedures for:
- checking the printhead for tidiness and removing dirt from it,
- replacing an air filter element
*see The **BOLTMARK®**-series Printer User Manual.*

7. STORING AND TRANSPORTING

7.1. STORING THE PRINTER

As an ink pigment may settle in the ink bottle, iModule®, and ink system components, the **EBS-6800P** printer should be prepared for storing differently than the **BOLTMARK®**-series printers that print with non-pigment ink.

In order to prevent the pigment from settling in storage, the **EBS-6800P** printers are subjected to an ink stirring procedure periodically in standby mode. Due to that, the printer should be left in standby mode in storage. In this mode, the LED between the OFF and ON buttons illuminates red.

For more details about the ink stirring procedure in standby mode see section ***"7.1.4. Procedure for stirring ink periodically in standby mode"****.*

When filled with ink, the ***EBS-6800P*** *printer must not be detached from electric power for a longer period than 1 week!*

There are three types of preparation for storing:
- for a period of **up to 1 week,**
- for a period of **up to 3 months,**
- for a period of **over 3 months.**

Environmental conditions and permissible mechanical hazards in storage:
- storage temperature: **from -5°C to +50°C**,
- relative humidity: **up to 90% without condensation**,
- shocks: **max 1 g, max 2 ms**.

7.1.1. STORING FOR UP TO 1 WEEK

In order to prepare the printer for storing over **up to 1 week**, shut down the printer in regular mode.

*For more details about shutting down the printer see The **BOLTMARK®**-series Printer User Manual.*

*When the **EBS-6800P** printer is stored for a period of **up to 1 week**, it is recommended to leave it in standby mode with the periodic ink stirring procedure enabled. In this mode, the LED between the OFF and ON buttons illuminates red. For more details about the ink stirring procedure in standby mode see section **"7.1.4. Procedure for stirring ink periodically in standby mode"**.*

After an **up to 1 week** period of storage, the way of starting up the printer depends on whether it was detached from electric power or not in storage.

- If the printer is stored in standby mode with the periodic ink stirring procedure enabled, it can be started up directly and no additional operations are required.
- If the printer is detached from electric power in storage, then before it is started up the ink bottle needs removing, shacking dynamically until a homogeneous liquid is obtained, and re-placing back to the printer.

*For more details about starting up the printer see The **BOLTMARK®**-series Printer User Manual.*

7.1.2. STORING FOR UP TO 3 MONTHS

How to prepare the printer for storing over a period of **up to 3 months** ...

1. Shut down the printer in regular mode.

   *For more details about shutting down the printer see The **BOLTMARK®**-series Printer User Manual.*

2. Leave the printer in standby mode with the periodic ink stirring procedure enabled, i.e. make sure that:

- outlet plug **3a** (see ***Fig. 1 on page 6***) is connected to electric power supply,
- power switch **POWER 5** on the accessories connector plate **4** is set to the „|" position

  In this mode, the LED between the OFF and ON buttons illuminates red.

  *For more details about the ink stirring procedure in standby mode see section **"7.1.4. Procedure for stirring ink periodically in standby mode"**.*

After an **up to 3 months** period of storage, the printer can be started up directly and no additional operations are required.

7.1.3. STORING FOR OVER 3 MONTHS

The **EBS-6800P** printer can be prepared for storing over a period of **more than 3 months** by the distributor's authorized service staff only.

*If the printer needs preparing for storing over a period of **more than 3 months**, contact your distributor.*

*The battery that backs up printer memory ensures that text files, blocks of parameters and the user's other settings are maintained for **about 1 month**. Due to that, the printer must be connected to electric power at least once a month for a minimum of 8 hours and left in standby mode. In this mode, the LED between the OFF and ON buttons illuminates red.*

7.1.4. PROCEDURE FOR STIRRING INK PERIODICALLY IN STANDBY MODE

The **EBS-6800P** printer has a built-in clock to switch it on in a special mode, in which the ink is stirred periodically at a certain interval (defined with jumpers). The positions of the clock configuration jumpers on the main electronic circuit board (**RKM**) are shown in ***Fig. 10***.

Fig. 10.

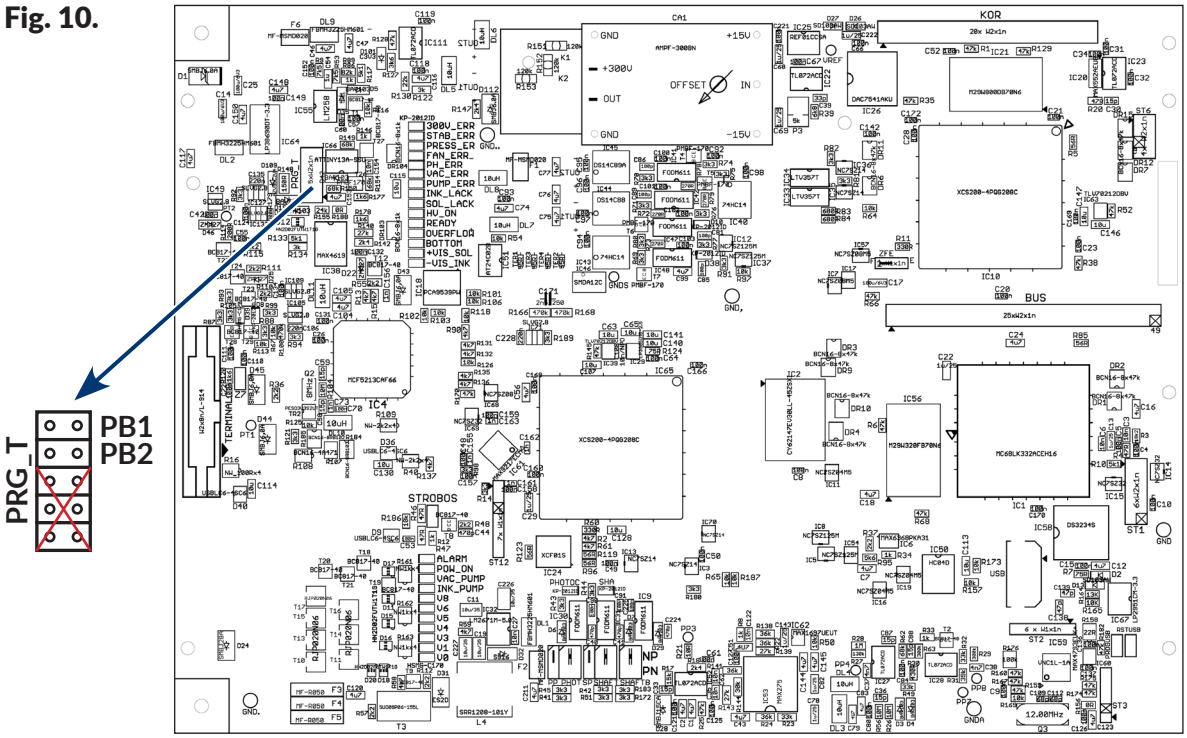

Jumper **PB1**	Jumper **PB2**	Stirring cycle	Comments
open	open	1 minute	diagnostic mode
closed	open	2 hours	
open	closed	6 hours	recommended mode
closed	closed	12 hours	

Follow the below-given steps to set up and enable the standby mode in which the ink is stirred periodically:

- set a required stirring cycle with jumpers **PB1** and **PB2**,

> *The position of the jumpers **PB1** and **PB2** can be changed exclusively when the printer is detached from electric power supply!*

> *A 1-minute stirring cycle is designed only for a clock diagnostics purpose.*
> *A **6 hour** cycle is recommended.*

- connect outlet plug **3a** (see ***Fig. 1 on page 6***) to electric power supply,
- make sure that transport protection **10a** of iModule® is in open position (see ***Fig. 6 on page 10***),
- set the power switch **POWER 5** on the accessories connector plate **4** to the „|" position; the LED between the OFF and ON buttons illuminates red.

If the above requirements are met, the printer automatically enters the standby mode in which the ink is stirred periodically.

When the printer is in the above mode and the time interval defined with the jumpers **PB1** and **PB2** elapses, a 10-minute stirring cycle starts and the ink in the ink bottle and in the ink system is stirred. The operation is signaled with the message **STANDBY - ink mixing !!**

If the printer is detached from, and then re-attached to, electric power supply, the counting of the time interval starts from the beginning.

A small amount of solvent is taken from the bottle during the stirring procedure. Therefore make sure that there is always some solvent in the bottle. Otherwise, the ink in the system gets thicker.

The average solvent consumption in the standby mode in which ink is stirred periodically:

- about **5 ml**/day for a 2-hour cycle,
- about **3 ml**/day for a 6-hour cycle,
- about **2 ml**/day for a 12-hour cycle.

7.2. TRANSPORTING THE PRINTER

Accessories required:
*- a set of transport-protection plugs (Part No. **P512678**), consisting of:*
*7 transport-protection plugs type **I** (including one spare),*
*5 transport-protection plugs type **II** (including one spare),*
*3 transport-protection plugs type **III** (including one spare).*

For more information about the transport-protection plugs contact your distributor.

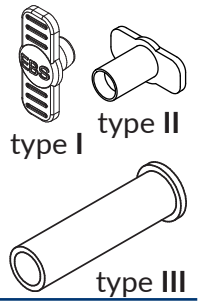

How to prepare the printer for transporting ...

1. Shut down the printer in regular mode.

   *For more details about shutting down the printer see The **BOLTMARK®**-series Printer User Manual.*

2. Detach outlet plug **3a** (see ***Fig. 1 on page 6***) from electric power supply.
3. Open the consumables compartment door **9** (see ***Fig. 7 on page 11***).
4. Set the transport protection **10a** of iModule® to the close position, *i.e.* rotate the protection through **90°** and press to the limit.

5. Lift the latch **17** that fastens the bottles.
6. Pull solvent bottle **11** and ink bottle **12** (see ***Fig. 11***) out of the printer.
7. Put transport-protection plugs type **I** **16** onto the bottle connectors in the printer.

Fig. 11.

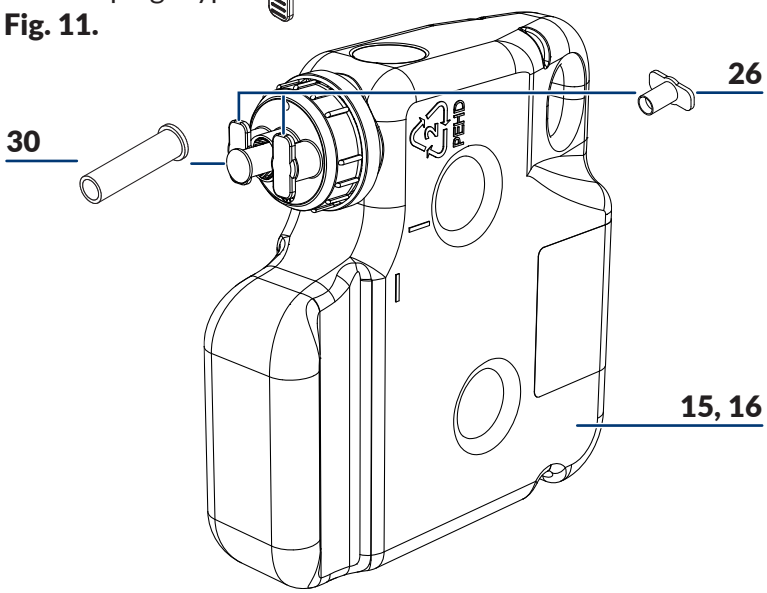

11	Solvent bottle.
12	Ink bottle.
25	Transport-protection plug type **III**.
26	Transport-protection plug type **II**.

8. Secure the bottles by means of transport-protection plugs type **II** **26** and type **III**

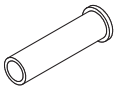 **25** (see *Fig. 11 on page 24*).

9. Close the consumables compartment door **9**.
10. Pack the printer and the bottles to packaging that will protect them against mechanical damage.

> *The printer must be transported in its regular working position only.*
> *While the printer or iModule® itself is transported, transport protection **10a** of iModule® must be in the closed position. The transport protection should not be opened until the printer is positioned in its workplace.*

11. The printer should be positioned in its working position immediately after handling.
12. Open the consumables compartment door **9**.
13. Install the bottles.

> *For more details about the installation of bottles see section **"4.1. Installing Bottles"**.*

14. Open the transport protection **10a** of iModule®, *i.e.* pull it out to the limit and rotate it through **90°**.
15. Close the consumables compartment door **9**.
16. Connect the outlet plug **3a** (see *Fig. 1 on page 6*) to electric power supply.
17. Position the power switch **POWER 5** on the accessories connector plate **4** to the „|" position; the LED between the OFF and ON buttons illuminates red.

    The printer is in the standby mode in which the ink is stirred periodically. In such a mode the printer can remain shut down for a period of up to 3 months.

> *For more details about the ink stirring procedure in standby mode see section **"7.1.4. Procedure for stirring ink periodically in standby mode"**.*

> *When filled with ink, the **EBS-6800P** printer must not be detached from electric power for a longer period than 1 week!*

Permissible mechanical hazards inside the packaging:

– shocks: **max 1 g, max 2 ms**.

8. TECHNICAL SPECIFICATIONS

The **EBS-6800P** printer parameters that differ from the **EBS-6800** printer parameters are:

- printer height: **470 mm** (see *Fig. 12*),

Fig. 12.

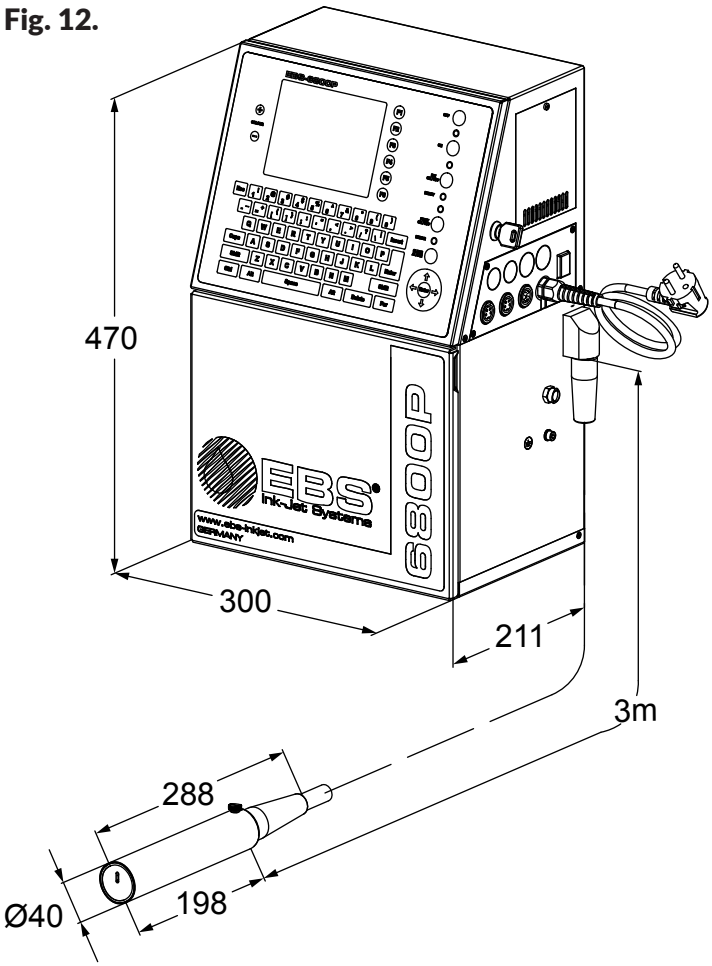

- ink: **pigment**,
- weight:
  printer: about **13.8 kg** (with no ink and solvent bottles),
  ink bottle: max. about **0.8 kg** (max. 750 ml),
  solvent bottle: about **0.9 kg** (900 ml),
- power supply:
  supply voltage: **100 - 240 VAC, 50/60 Hz**,
  current consumption: **0.65 - 0.3 A**.

The power supply circuit of the printer must be secured with a cut-out device, whose rated current is:
max 16 A for 230 VAC
or
max 20 A for 110 VAC.

The other technical parameters of the **EBS-6800P** printer are the same as those of the **EBS-6800** printer.

9. VERSION REVIEW

Version	Date of publication [dd.mm.yyyy]	Version of main control program
2016/07/16#1.0EN	15.07.2016	35_0D
2016/10/20#1.0EN	20.10.2016	35_1A
2019/08/08#1.2EN	08.08.2019	35_1A
2020/03/19#1.3EN	**19.03.2020**	**39_1D**

Made by

EBS Ink Jet Systeme GmbH
D-51588 Nümbrecht-Elsenroth, Alte Ziegelei 19-25
+49 (0)2293 / 939-0 +49 (0)2293 / 939-3
www.ebs-inkjet.de mail@ebs-inkjet.de